legrand®

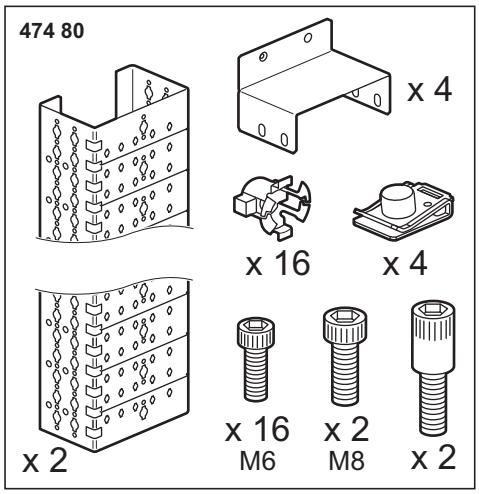

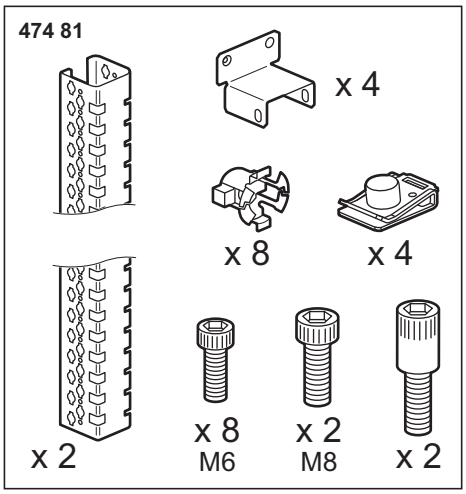

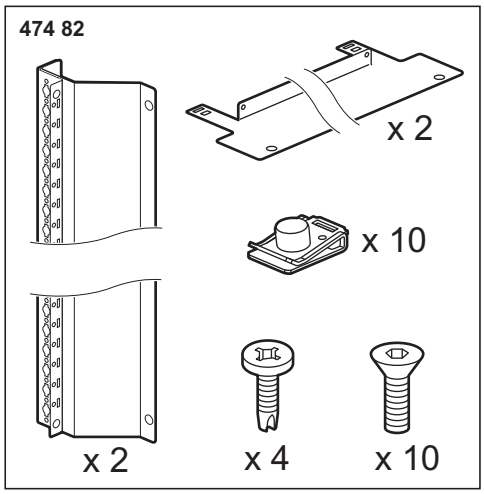

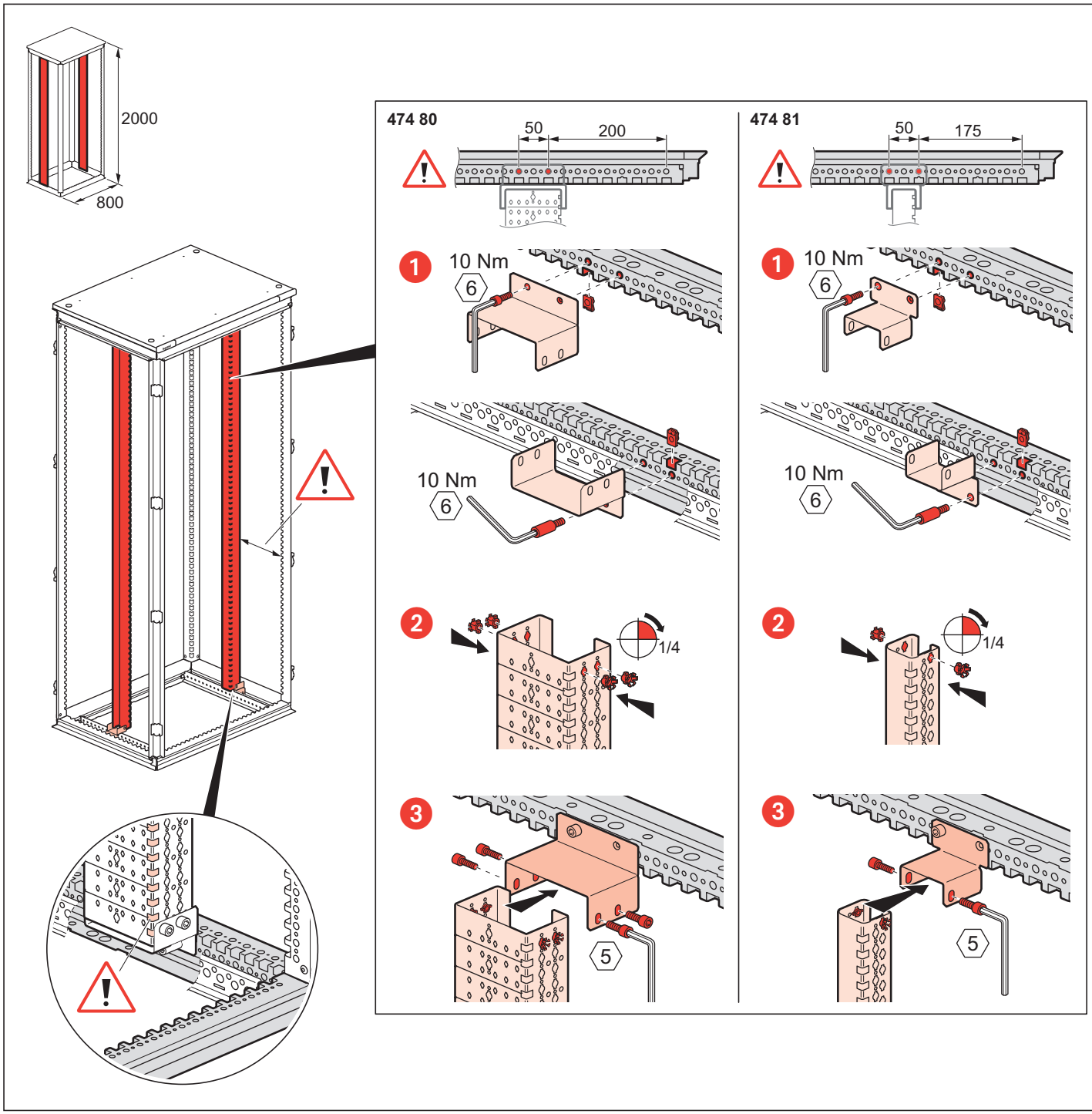

N042543/01

474 82

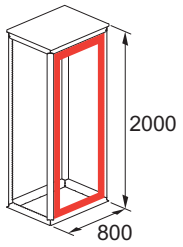

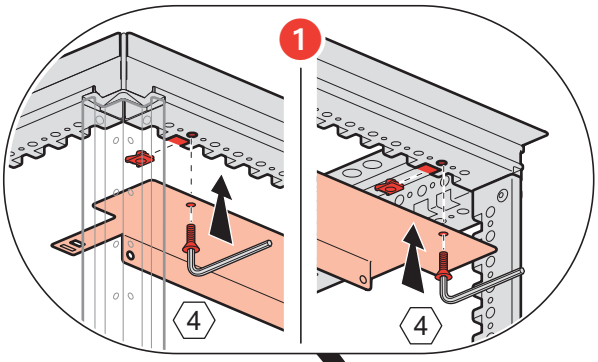

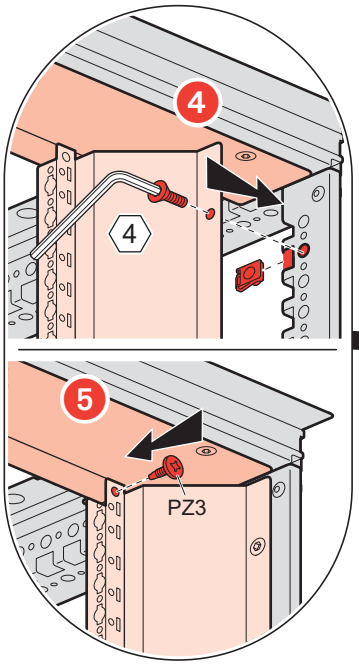

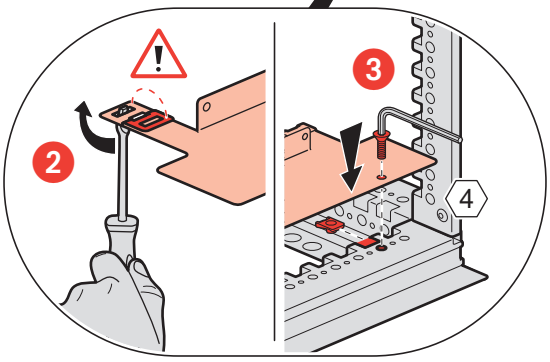

N042543/01