PCE data sheet

article#	**3922-10f9v**
article description	**CEE-flanged socket straight 54x60mm 32A 2p 24/42VDC IP66/IP67 TWIST**
description long	CEE-flanged socket straight 54x60mm 32A 2p 24/42VDC IP66/IP67 TWIST housing material: PA6 rated current: 32A number of poles: 2 (2P) clock-position: 10h rated voltage/frequency: 24/42V DC contacts: brass nickel plated connection technology: screw terminals dimensions (flange/fixing center): 54x60 mm / 44x44 mm IP protection class: IP66/IP67
GTIN (EAN)	9003399308512
country of origin	AT
customs number	85366990
net weight	0.137 kg
packaging quantitiy	10
minimum order quantitiy	10

ETIM 7.0	EC001317
IEC-amperage	32 A
Voltage acc. EN 60309-2	<50 V DC grey
Number of poles	2
Clock hour position	10 h
Identification colour	White
Degree of protection (IP)	IP67
Connection system	Schraubklemme
Angle of plug	Straight
Material	Plastic
Flange size vertical	60 mm
Drill hole distance vertical	44 mm
Flange size horizontal	54 mm
Drill hole distance horizontal	44 mm

wire flexible	1-10 mm²
wire solid	1,5-10 mm²
contact screws	160 Ncm
dismantling length	70 mm
stripping length	14-16 mm

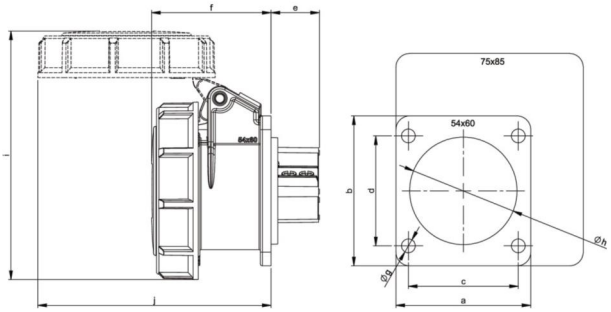

www.manufacturer-safety.info

9/21/2021