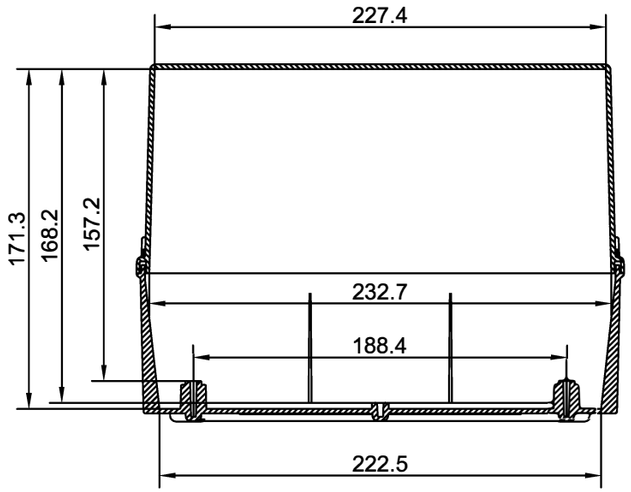
227.4
171.3
168.2
157.2
232.7
188.4
222.5

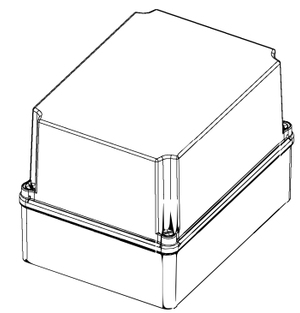

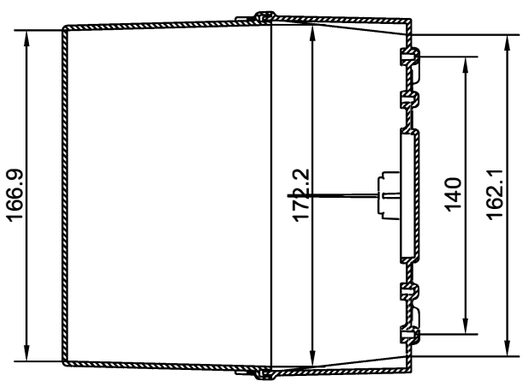
166.9
171.2
140
162.1

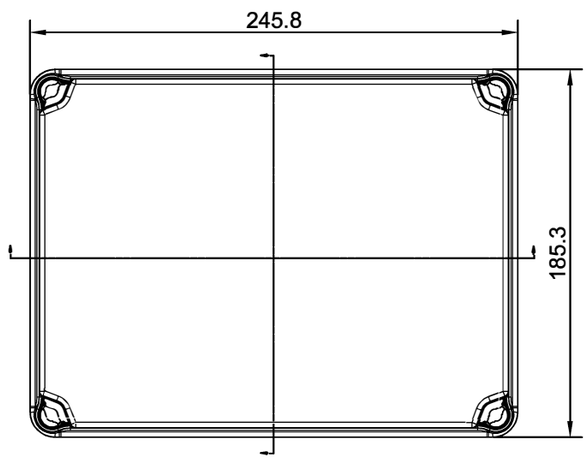
245.8
185.3

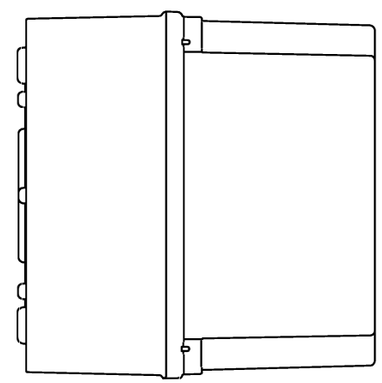

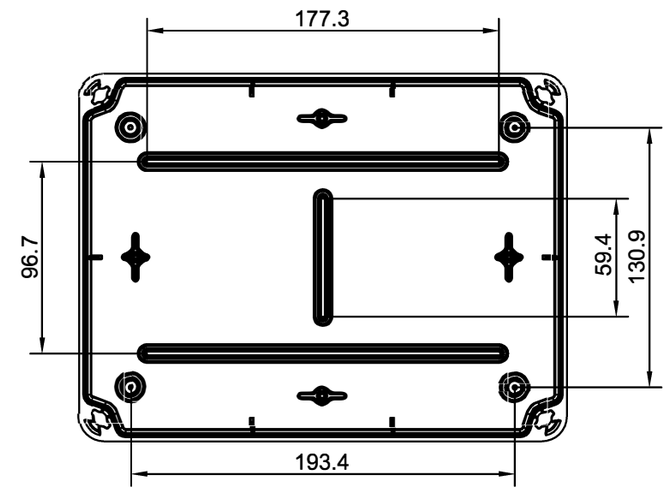
177.3
96.7
59.4
130.9
193.4

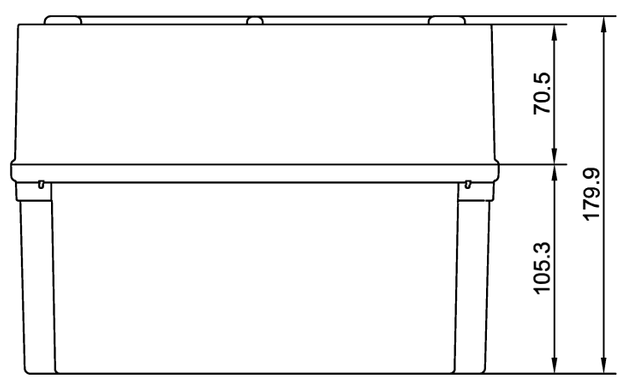
70.5
179.9
105.3