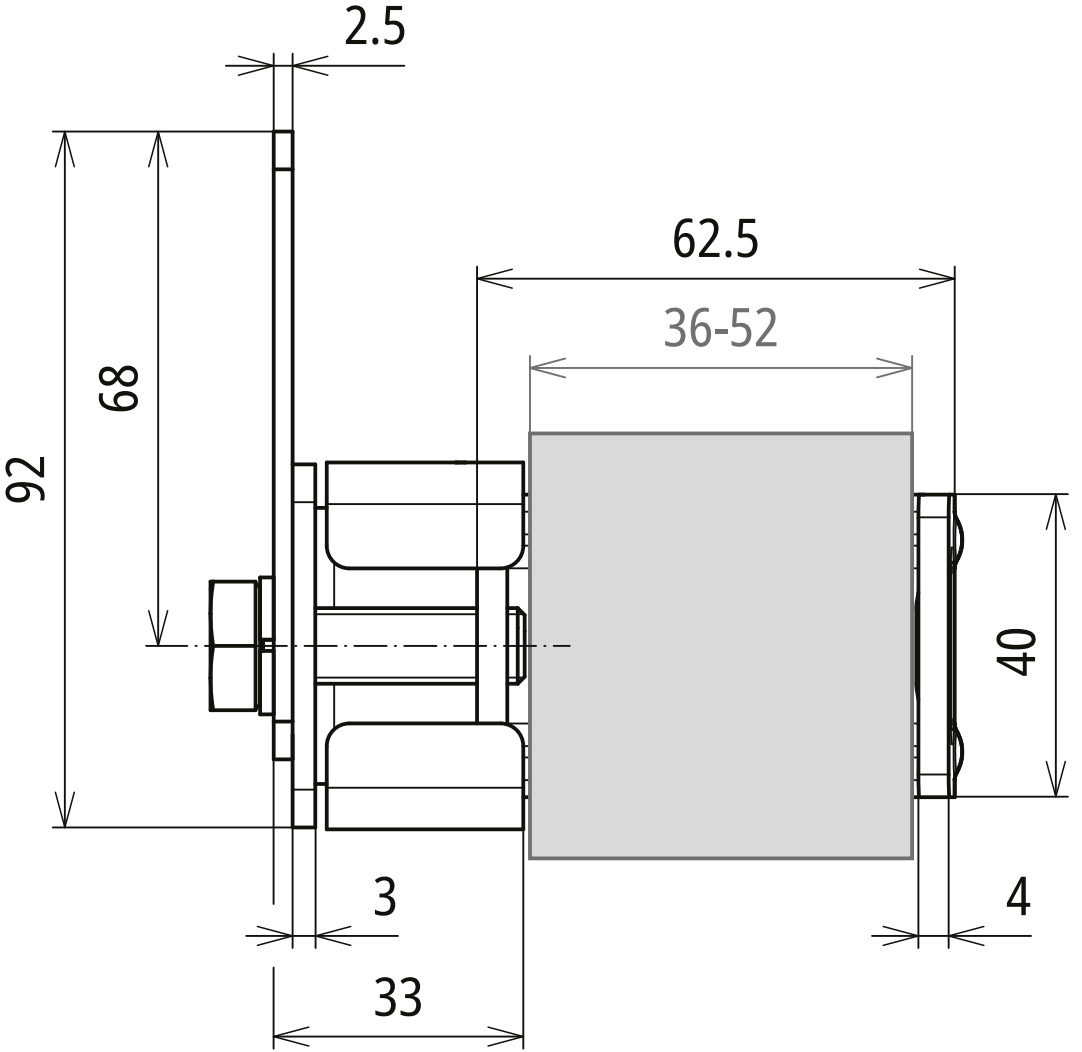
2.5
62.5
36-52
92
68
40
3
4
33

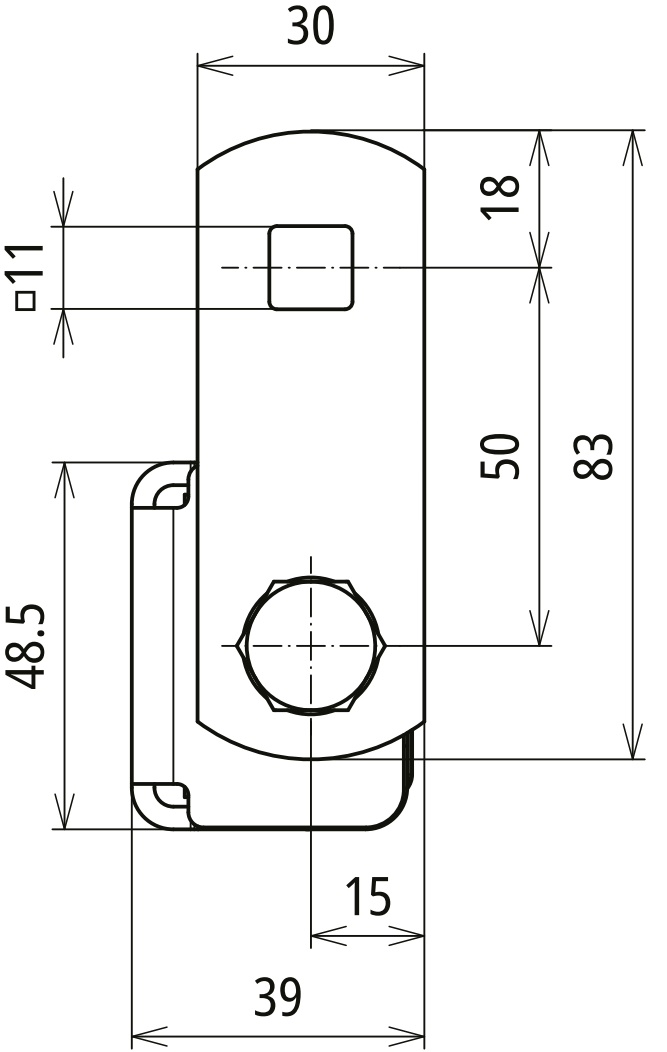
30
18
□11
50
83
48.5
15
39