Technical data sheet

Internal corner hood, for Rapid 45-2 device installation trunking, type 53130
Item number: 6113254

Internal corner for changing the direction of Rapid 45 device installation trunking.

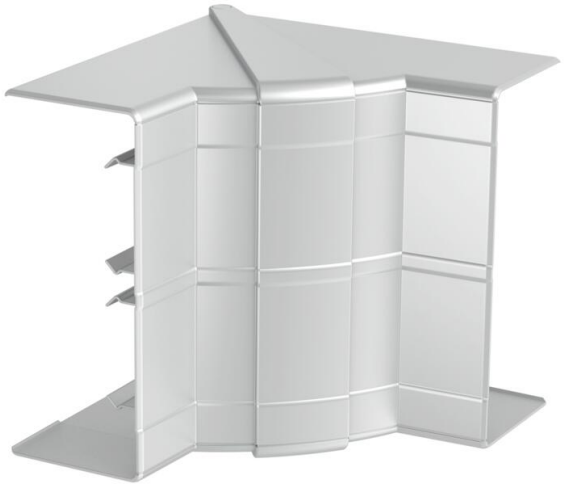

PC/ ABS Polycarbonate/Acrylnitrile-butadiene-styrene

Master data

Item number	6113254
Type	GK-IH53130AL
Description 1	Internal corner
Description 2	variable
Manufacturer	OBO
Dimension	140x145x145
Colour	aluminium
Material	Polycarbonate/Acrylnitrile-butadiene-styrene
Smallest sales unit	1
Unit of quantity	Piece
Weight	13.17 kg
Weight unit	kg/100 pc.
CO2 Footprint (GWP) Cradle-to-Gate	0,7291 kg CO2e / 1 Piece

Technical data sheet

Internal corner hood, for Rapid 45-2 device installation trunking, type 53130
Item number: 6113254

Dimensions

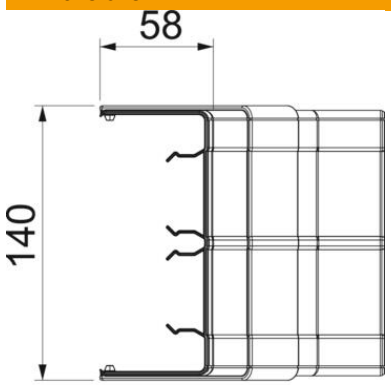

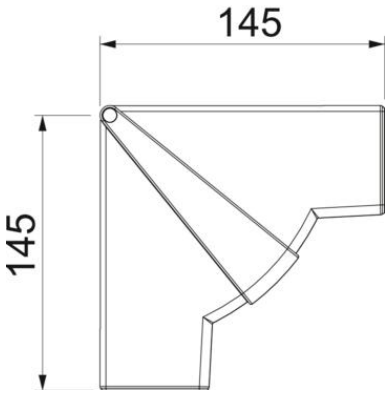

Length	145 mm
Width	140 mm
Height	58 mm

Technical data

Number of covers	1
Version for	Hood fitting
Shape	Symmetrical
Halogen-free	yes
Cable retaining clip	no
Duct connector	no
Cover mounting type	Cross-over
Mounting perforation in base	no
Cover width	0 mm
Cover width 2	0 mm
Cover width 3	0 mm
Protection rating	IP40
Protective film	no
Protection rating IK code	IK08
Permitted temperature range, max.	60 °C
Permitted temperature range, min.	-15 °C
Angle range, max.	97 mm
Angle range, min.	83 mm