Technical data sheet

Sheet steel flat angle cover

Item number: 6279860

Cover for closing the flat angle of the Rapid 80 GS device installation trunking.

St Steel

Master data

Item number	6279860
Type	GS-OTFRW
Description 1	Cover
Description 2	for flat angle 80
Manufacturer	OBO
Dimension	12x76,5x400
Colour	Pure white; RAL 9010
Material	Steel
Smallest sales unit	1
Unit of quantity	Piece
Weight	47.6 kg
Weight unit	kg/100 pc.
CO2 Footprint (GWP) Cradle-to-Gate	1,7173 kg CO2e / 1 Piece

Technical data sheet

Sheet steel flat angle cover

Item number: 6279860

Dimensions

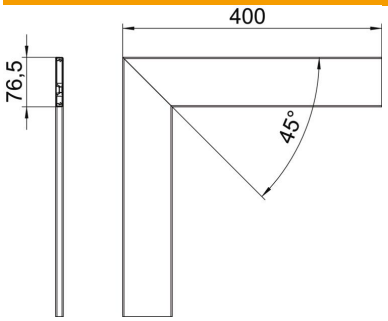

Length	400 mm
Width	76.5 mm
Height	12 mm

Technical data

Version for	Smooth
Halogen-free	yes
Cover mounting type	Internal
Protection rating	IP30
Protective film	yes
Protection rating IK code	IK10
Permitted temperature range, max.	60 °C
Permitted temperature range, min.	-25 °C