Technical data sheet

Wall connection collar, 3- and 4-sided, duct height 80 mm, FS

Item number: 7218126

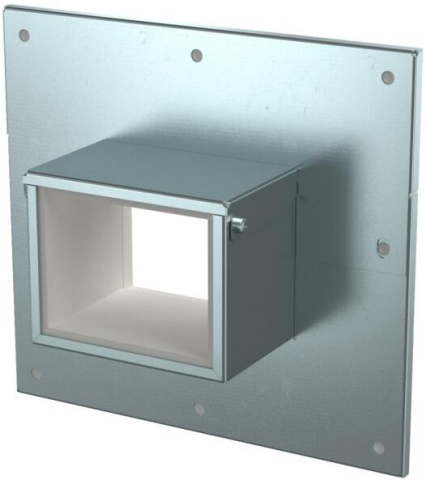

Wall connection collar, 4-sided, with integrated seal for PYROLINE® Rapid PLM installation duct. For mounting in the area of wall and ceiling connections as well as wall penetrations. Can also be used as 3-sided wall connection collar for direct wall or ceiling mounting of the duct.

CE

St	Steel
FS	Strip galvanized

Master data

Item number	7218126
Type	PLM WC 0810 FS
Description 1	Wall connection collar
Description 2	3- and 4-sided
Manufacturer	OBO
Dimension	85x253x233
Colour	zinc
Material	Steel
Surface	Strip galvanized
Surface standard	DIN EN 10346
Smallest sales unit	1
Unit of quantity	Piece
Weight	65.3 kg
Weight unit	kg/100 pc.
CO2 Footprint (GWP) Cradle-to-Gate	3,6426 kg CO2e / 1 Piece

Technical data sheet

Wall connection collar, 3- and 4-sided, duct height 80 mm, FS

Item number: 7218126

Dimensions

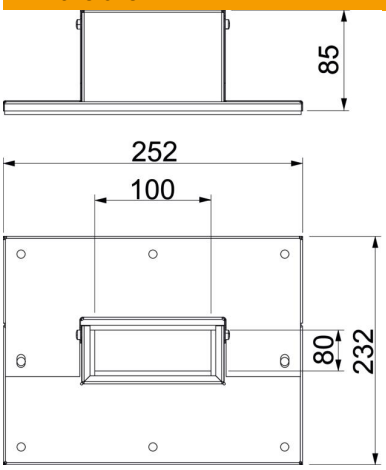

Dimension B	252 mm
Dimension b	100 mm
Dimension D	232 mm
Dimension d	80 mm

Technical data

Type of accessory	Wall connection collar
Accessories	yes
Spare part	no