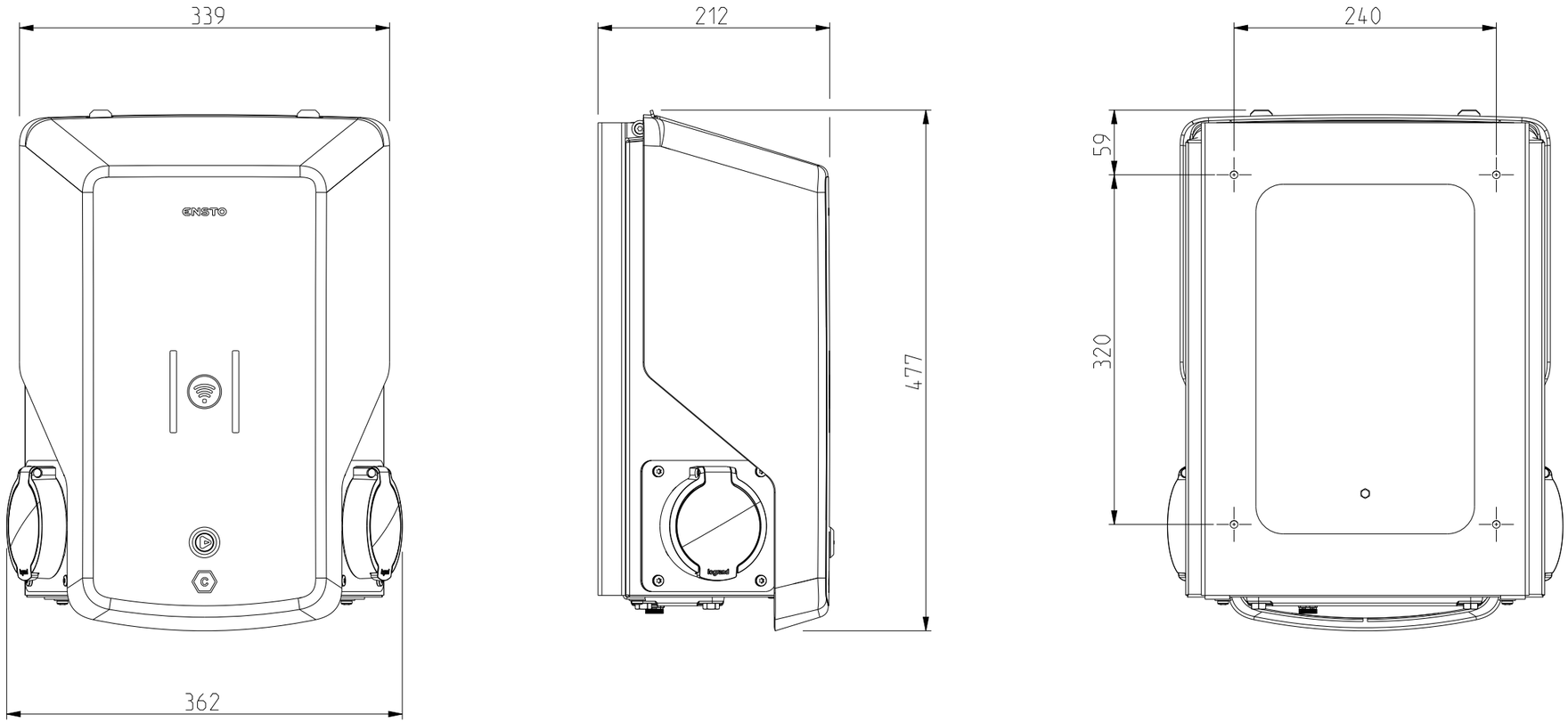

ENSTO Ensto Building Systems Finland			Dimensional drawing EVB200B series
Scale 1:5 A3	Date	18.11.2022	
	By	MTN	
	Checked		
Sheet No: 1 (1)	Ctrl		

Replaces:

Replaced:

Ref: 000615074 A

Code:

Copyright Ensto. Unauthorized use and distribution of this document is strictly prohibited.