Technical data sheet

EDS plug-in seal, light grey

Item number: 2012358

The push-in nipple can be cut back to suit the relevant cable diameter.

TPE Thermoplastic elastomer

Master data

Item number	2012358
Type	EDS M32 LGR
Description 1	Plug-in seal
Description 2	for 3-mm wall thickness
Manufacturer	OBO
Dimension	M32
Colour	Light grey; RAL 7035
Material	Thermoplastic elastomer
Smallest sales unit	50
Unit of quantity	Piece
Weight	0.295 kg
Weight unit	kg/100 pc.
CO2 Footprint (GWP) Cradle-to-Gate	0,0142 kg CO2e / 1 Piece

Technical data sheet

EDS plug-in seal, light grey

Item number: 2012358

Dimensions

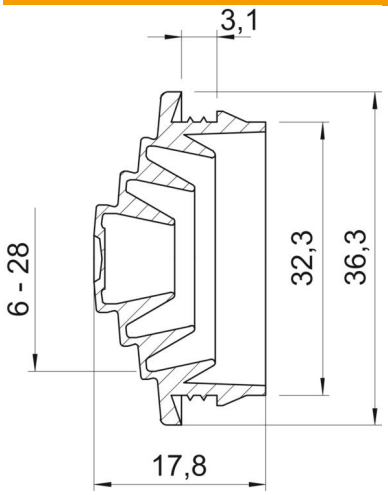

Dimension A	3.1 mm
Dimension D1	36.3 mm
Dimension D2	32.3 mm
Dimension D3	6 mm
Dimension D4	10 mm
Dimension D5	15 mm
Dimension D6	20
Dimension D7	25
Dimension D8	28
Dimension L	17.8 mm
Dimension t	3.1 mm

Technical data

Version for	Cuttable
Flame-resistant	acc. to VDE 0471/DIN 695 Part 2-1, test temperature 650°C
for diameter, max.	28 mm
for diameter, min.	0 mm
for wall thickness, max.	3.1
for wall thickness, min.	2.5
Size	M32
Halogen-free	yes
Nominal diameter	32 mm
Protection rating	IP54