Operating and installation instructions

Socket outlet with earthing pin and USB-C port



Socket outlet with earthing pin and USB port type C+C PD

WAS4455xx

CE

:hager

EN

1 Safety instructions....3

2 Design and layout of the device (Fig. 01)....4

3 Function....5

3.1 Correct use....5
3.2 Product characteristics....5

4 Application....6

5 Information for qualified electricians....8

5.1 Installation and electrical connection....8

6 Appendix....10

6.1 Technical data....10
6.2 Disposal note....10

1 Safety instructions

Electrical devices may only be installed and assembled by a qualified electrician in accordance with the relevant installation standards, guidelines, regulations, directives, and safety and accident prevention regulations of the country of installation.

Failure to comply with these installation instructions may result in damage to the device, fire or other dangers.

Danger due to electric shock. Do not operate the device without the application module.

These instructions are an integral component of the product and must be retained by the end user.

2 Design and layout of the device (Fig. 01)

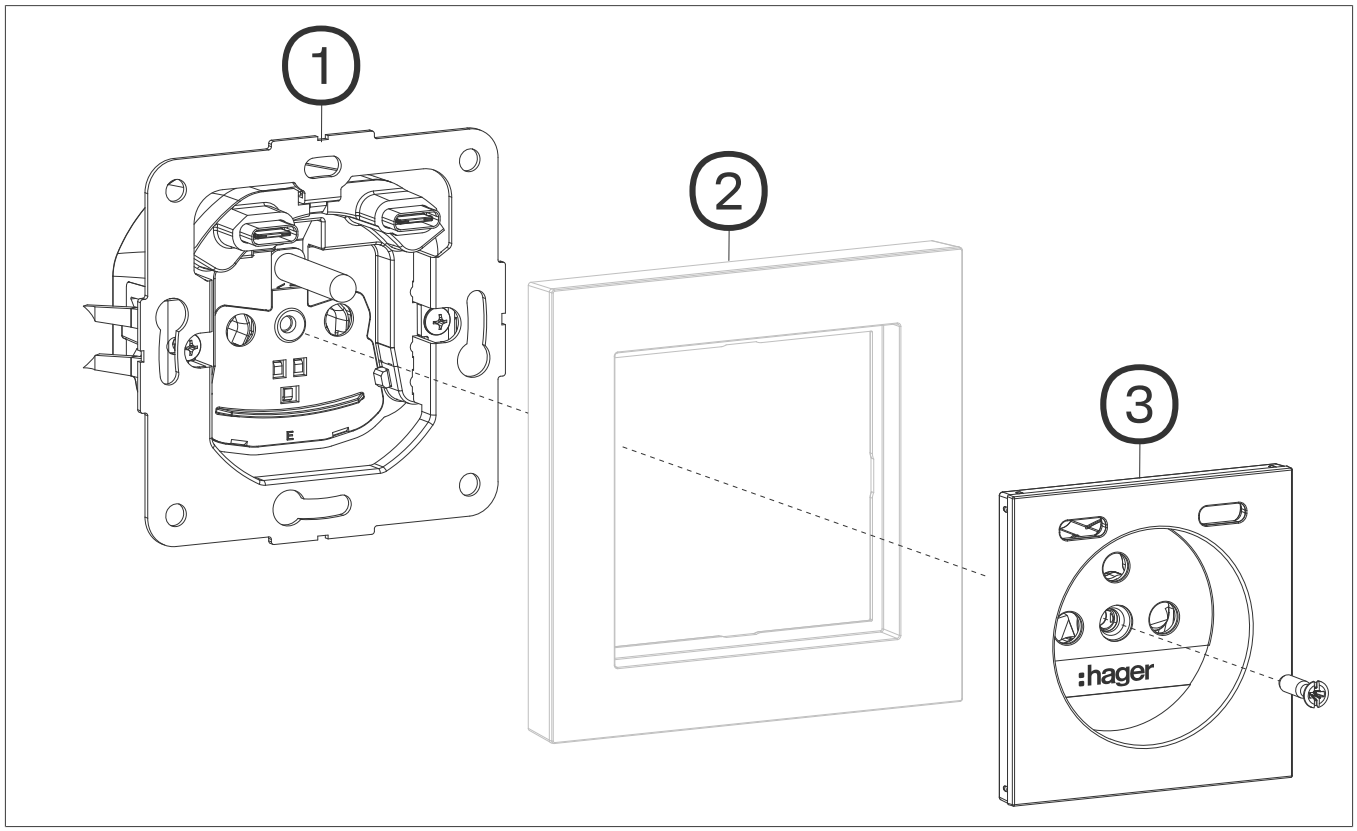

Fig. 1: Design and layout of the device

1. Socket outlet insert
2. Frame (not in scope of delivery)
3. Centre piece

3 Function

3.1 Correct use

Correct use

- Mains voltage power supply of electronic devices with mains plug via socket outlet with earthing pin
- Charging of mobile devices such as smartphones, smartwatches, tablets, etc. via USB-C ports
- Only suitable for use in indoor areas with no drip and no spray of water
- Installation into wall box with at least 40 mm depth

3.2 Product characteristics

- USB ports short-circuit-proof and overload-proof (electronic fuse)
- Installation in multiple combinations
- Connection of socket outlet with earthing pin and USB port to shared plug-in terminals

4 Application

Caution

The use of non-standardised charging cables and plugs can cause device malfunctions.

The devices may be destroyed.

- Use only approved charging cables and plugs.

If devices are connected to the USB ports with their original charging cables, the charging controller can recognise the devices and regulate the charging current.

Charging batteries of mobile end devices (Fig. 02)

- Insert the USB plug of the charging cable into the USB port.

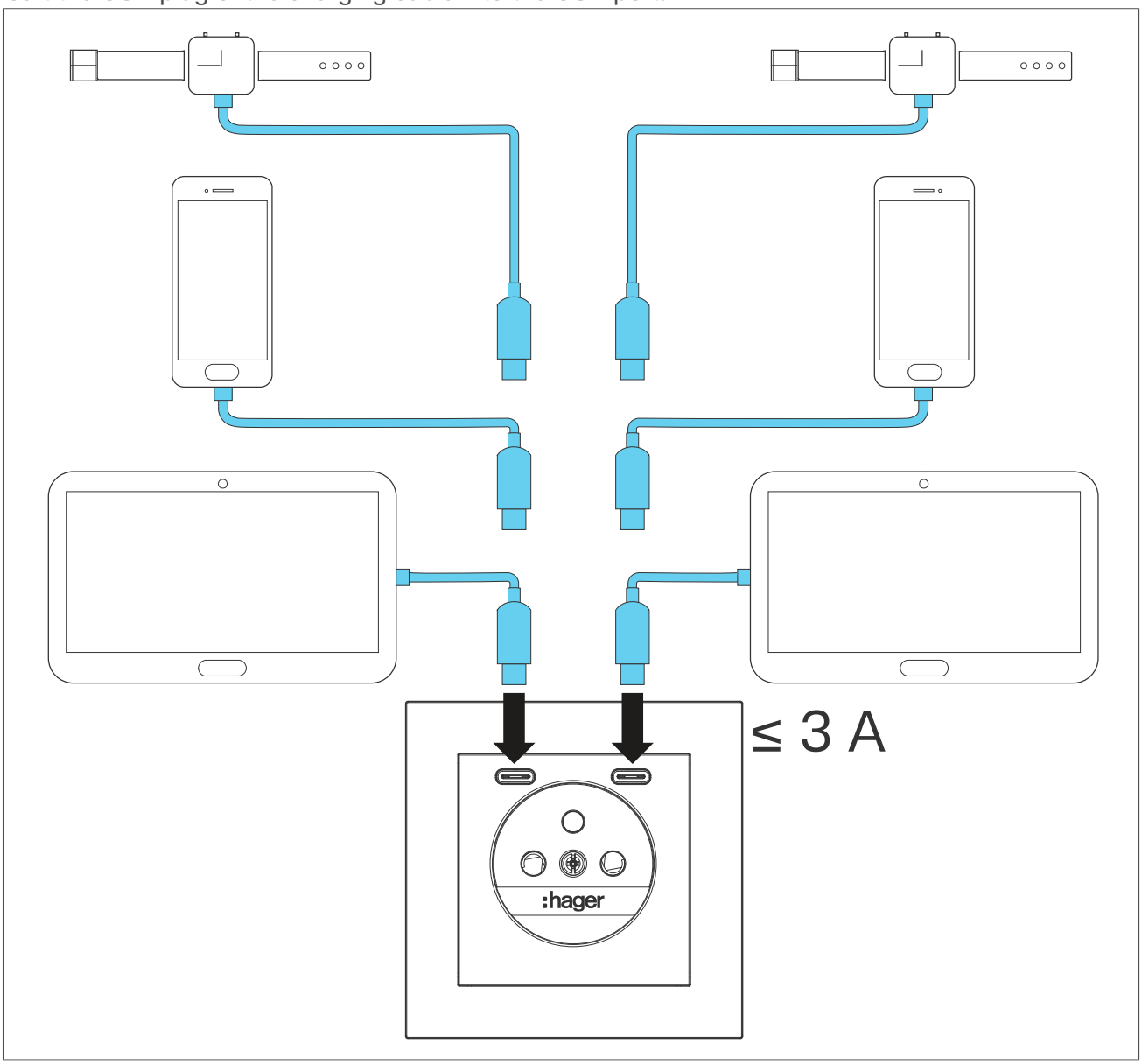

Fig. 2: Connecting USB devices

The batteries of the connected device are recharged automatically.

Observe the manufacturer's instructions for the connected device regarding the charging time and charging behaviour of the batteries.

If two devices are connected, the charging time may extend as the charging current is divided between the two ports.

5 Information for qualified electricians

5.1 Installation and electrical connection

Danger

Electric shock when live parts are touched!

An electric shock can lead to death!

- Isolate all connection cables before working on the device and cover any live parts in the area!

Connection and installation of the device

☑ A miniature circuit breaker with max. 16 A is installed to protect the device.

- Connect the device (1) according to the connecting diagram (Fig. 03).

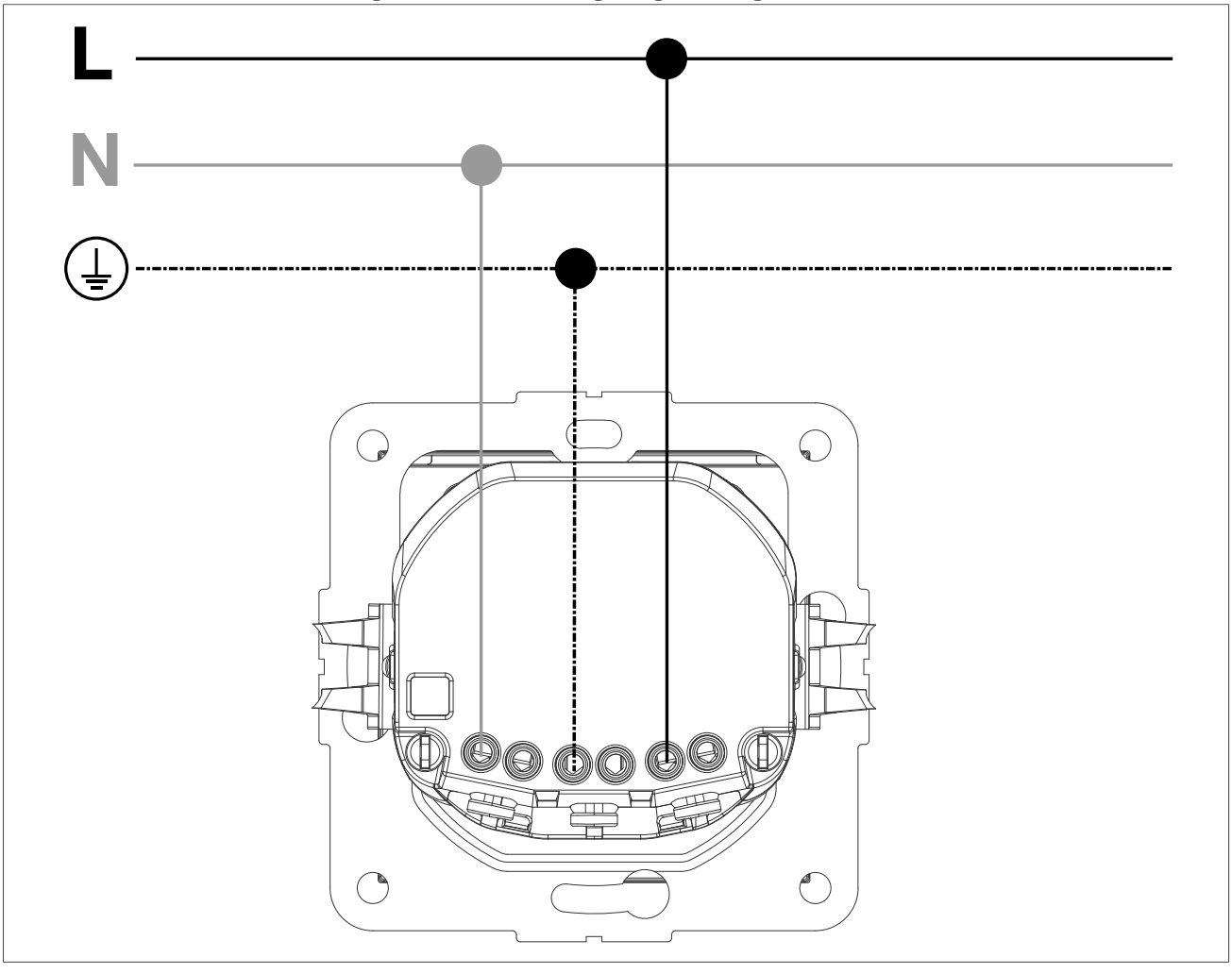

Fig. 3: Electrical connection

- Place the device in the wall box (USB port at top) and secure with the wall box screws or fastening claws.
- Attach frame (2).
- Attach centre plate (3) and secure with the screw.

Depending on the installation location of the socket outlet and the charge status of the connected device, a minimal amount of noise may occur during charging. This is especially important to consider when installing in bedrooms.

6 Appendix

6.1 Technical data

Mounting orientation	USB port at top
Connecting terminals	2 x 1.5 ... 2.5 mm²
Degree of protection	IP20
Operating temperature	0 ... 35°C
Storage/transport temperature	-20 ... 60°C
Built-in depth	32 mm
Socket outlet with earthing pin	
Nominal voltage	250 V~, 50 Hz
Miniature circuit breaker	≤ 16 A
USB port	
Input voltage	230 V~ +10%/-15%, 50 Hz
Input current	≤ 0.3 A
USB output	5.0 V⎓ ±5% / 3.0 A 9.0 V⎓ ±5% / 2.22 A
USB output power	≤ 20.0 W
Total USB output power	≤ 20.0 W

Overheating protection: In the event of overheating, the charging device switches off for a short time to cool down. The charging operation is resumed automatically.

Power dissipation (Standby consumption)	≤ 70 mW
Energy efficiency	≥ 83.8%
Energy efficiency at low load (10%)	≥ 79.4%
Charging protocols	USB PD 3.0, BC1.2, QC3.0, Apple 2.4A, Samsung 2A

6.2 Disposal note

Disposal note

Correct disposal of this product (electrical waste).

(Applicable in the European Union and other European countries with separate collection systems)

This marking shown on the product or its documentation indicates that it should not be disposed of with other household waste at the end of its working life. To prevent possible harm to the environment or human health from uncontrolled waste disposal, please separate this device from other types of waste. Recycle the device responsibly to promote the sustainable reuse of material resources.

Household users should contact either the dealer where they purchased this product, or their local government office, for details of where and how they can take this device for environmentally safe disposal.

Commercial users should contact their supplier and check the terms and conditions of the purchase contract. This product should not be mixed with other commercial waste for disposal.

Berker GmbH & Co. KG
Zum Gunterstal

66440 Blieskastel
Germany

T +49 6842 945 0
F +49 6842 945 4625
info@hager.com
hager.com

2026-03

6LE090429A